① REFRIGERATOR	AVATCO SS-2R-HC 54" REACH - IN	
② FREEZER	TURBO AIR, TSF-49SD	
③ RANGE	VULCAN, GAS RANGE, MODEL #36LC	
④ 3 COMP. SINK	STAINLES STEEL 18"X18"X14" with internal round corner PROVIDE 12" S.S. SPLASH GUARD	
⑤ PREP SINK	STAINLES STEEL	
⑥ HAND SINK	STAINLES STEEL	
⑦ WORK TABLE	STAINLES STEEL - 72" X 30" 14 GA, W/ ROUND CORNER	

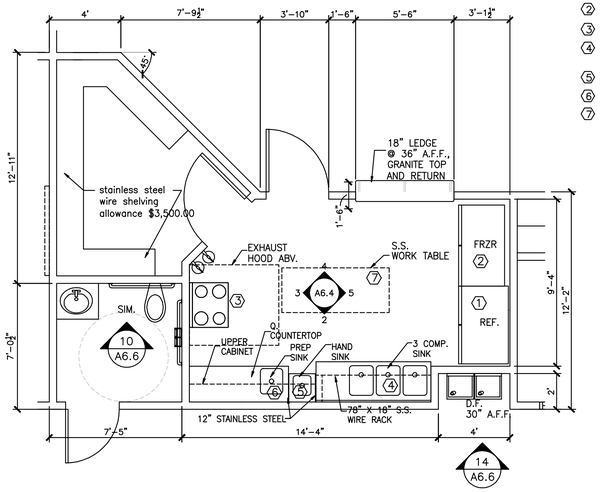

1 KITCHEN PLAN-ENLARGED
1/4" = 1'-0"

NOTE:

1. HAND SINK SHALL BE PROVIDED WITH A SOAP DISPENSER, PAPER TOWEL HOLDER AND TRASH RECEPTACLE.

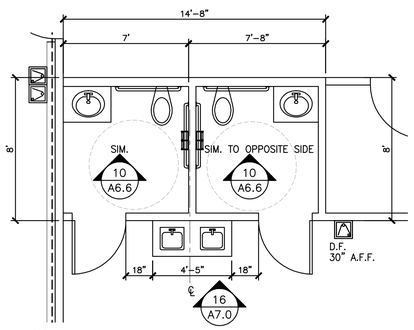

2 RESTROOM PLAN @ ACTIVITY-ENLARGED
1/4" = 1'-0"

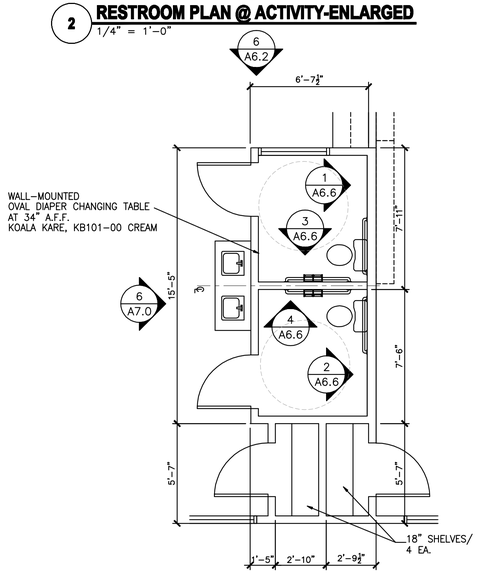

3 RESTROOM PLAN-ENLARGED
1/4" = 1'-0"

CLASSROOM #300
CLASSROOM #350

NOTE:

1. PROVIDE BLOCKING FOR CHANGING TABLE.

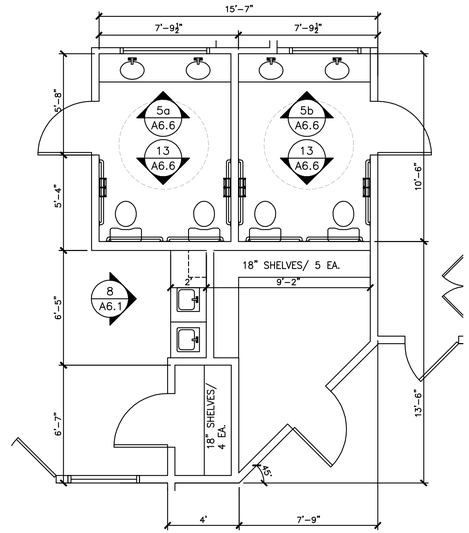

4 RESTROOM PLAN-ENLARGED
1/4" = 1'-0"

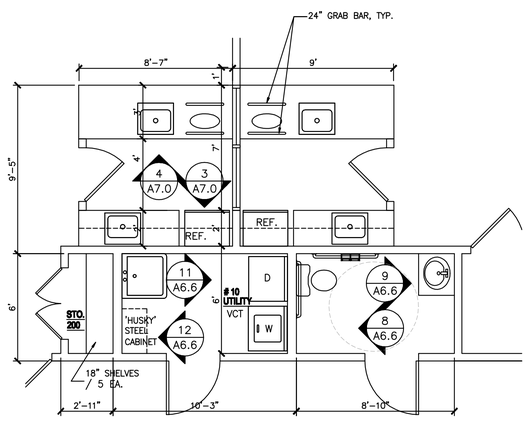

5 UTILITY/RESTROOM PLAN-ENLARGED
1/4" = 1'-0"

CLASSROOM #150-KITCHEN
CLASSROOM #200-KITCHEN

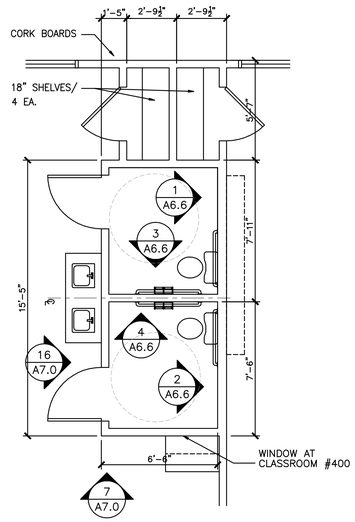

6 RESTROOM PLAN-ENLARGED
1/4" = 1'-0"

CLASSROOM #400-SIM.
CLASSROOM #450
CLASSROOM #500
CLASSROOM #550-OPP. HD.

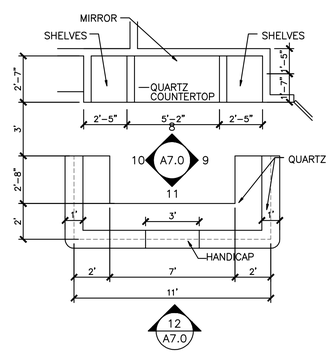

7 RECEPTION AREA PLAN-ENLARGED
1/4" = 1'-0"

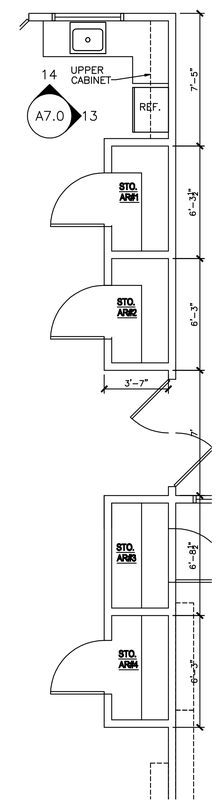

8 ACTIVITY ROOM COUNTER PLAN-ENLARGED
1/4" = 1'-0"

GENERAL NOTE:

ALL BATHROOMS TO BE SLOPED TO FLOOR DRAIN. (SEE:P-1)

REVISIONS AND ISSUANCE

NO.	DATE	DESCRIPTION
1	08/13/2017	PRICING

IVY KIDS EARLY LEARNING CENTER

4434 CR 94
Manvel, Tx 77578

REGISTERED ARCHITECT JOHN CHEYNE HOOD 8305 STATE OF TEXAS

01/09/2018

DRAWING TITLE

ENLARGED FLOOR PLANS

DRAWN BY	CHECKED BY JC
DATE 03/30/2017	JOB NO. gleannloch

DRAWING NO. **A-2.3**